ACESSÓRIOS DE MOTOSSERRA

Recambios de Motosierra

Chainsaw Spare Parts

6131
EAN 5604547069329

BARRA MOTOSSERRA 10" 25CM 3/8" 050 PICCO/MINI/LP - 40 ELOS

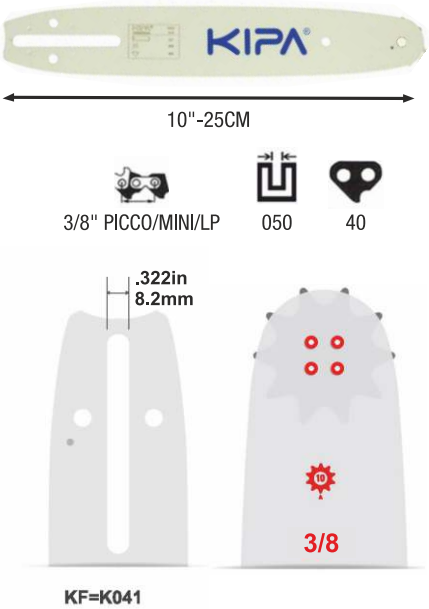

HUSQVARNA: 23, 36, 41, 136, 137, 141, 142, 235, 240, 240E, 243, 250PS, 323P4, 325P4X,.
JONSERED: 2014, 2016, 2035, 2036.
POULAN: 1800, 2000, 2150, 2155, 2160, 2100, 2300AV, 2300CVA, 2400, 2500, 25A, MICRO 25, P600, S25D, S25CVA, S25DA. **// HOMELITE:** 20AV, 23AV, 3300, 3350, 3800, 3850, D3350B,
EFCO: 125, 131, 132, 132S, 3600, 4000, PT2500, MT350, MT3600, MT3700, MT4000.
DOLMAR: 100, 101, 102, 103, 104, 105, 106, 108, 200, 260, 270, 290, ES-161, ES-171, PS-34, PS-340.
ECHO: CS-280, CS-290, CS-300, CS-301, CS-302(AFTER #0015304), CS-302S, CS-305, CS-306, CS-310, CS-315, CS-330, CS-330T, CS-341, CS-346.
ZENOAH: G2500PS, G2000T, GT250-10, GT310-12, GT310-14, G2500T, G3200T, GZ3500T, G300T, G310TS.

6148
EAN 5604547074118

BARRA MOTOSSERRA 12" 30CM 3/8" 050 PICCO/MINI/LP - 44 ELOS

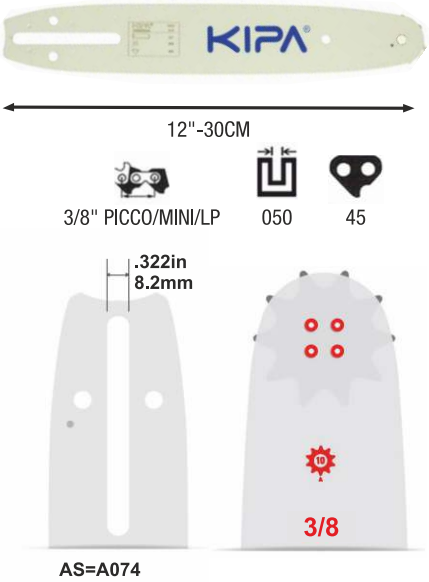

STIHL: 009, 010, 011, 012, 017, MS170, MS171, 018, MS180, MS181, 019, MS190, MS191, MS192, MS193, 020, MS200, MS201, 021, 022, MS210, MS211, 019T, MS190T, MS191T, MS192T, MS193T, 020T, MS200T, MS201T, H70, H75, HT100, HT101, HT130, HT131, E140, E160, E180, MSE140, MSE160, MSE180, MSE200

6132
EAN 5604547069336

BARRA MOTOSSERRA 12" 30CM 3/8" 050 PICCO/MINI/LP - 45 ELOS

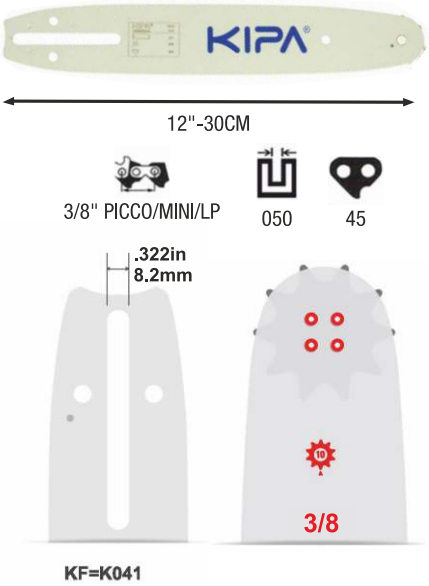

DOLMAR: 101, 102, 103, 104, 105, 106, 108, 275, 285, 295, ES35, ES40, ES40A, ES41.
ECHO: CS1550FT, CS1800, CS1850FT, CS2000, CS2100, CS2600, CS2600ES, CS2700, CS2700ES, CS301, CS302, CS302S, CS3050, CS315, CS320EVL, CS328, CS330EVL, CS340, CS3400, CS345.
HUSQVARNA: 335XPT, 338XPT, 343T, 136, 137, 141, 142, 230, 243, 250PS, 323P4, 325P4, 325P4X,
MAKITA: DCS340, DCS350, DCS380, DCS390, DCS390S, DCS400, DCS401. // **MC CULLOCH (US):** 335, 435, 440, 441, 738. // **PARTNER (SE):** 330, 335, 340, 345, 350. // **TANAKA:** 290, 300, ECS320, ECS330, ECS3301, ECS3351, ECS3500, ECS360.
SHINDAIWA: 100, 110, 120, 140, 150E, 160, 285S, 300S, 305, 305AVZ, 340, 345,346, 350, 352, 355,
ZENOAH: G300S, GT250TS, G250TS, G300S, G300T.
KONTA/TOPSUN T36.

6133
EAN 5604547069343

BARRA MOTOSSERRA 14" 35CM 3/8" 050 PICCO/MINI/LP - 50 ELOS

ALPINA: P360, P370, P390.
EFCO: 125, 131, 132, 135, Mt3600, MT4000
OLEO MAC: 240, OM17E, OM19E, OME200.
STIHL: 009, 010, 011, 017, 018, 019, 019T, 020, 020T, 021, 021C, 023, 023C, 023L, 025, 025C, E10, E14, HT131, HT70, HT75, HTE60, MS140, MS160, MS170, MS171, MS180, MS181, MS190,

6134
EAN 5604547069350

BARRA MOTOSSERRA 14" 35CM 3/8" 050 PICCO/MINI/LP - 52 ELOS

ALPINA: 352, 382.
DOLMAR: 100, 100S, 101, 102, 103, 104, 105, 106, 108, 275, 285, 295, C2040, ES140, PS3300TH, PS34, PS340, PS3400TH, PS341, PS3410, PS344, PS35, PS350, PS350C, PS39.
ECHO: CS1550FT, CS1800, CS1850FT, CS2000, CS2100, CS2600, CS2600ES,CS2700, ECS150, ECS18SOFT, ECS2000, ECS3000, E155, S2000, S2600.
EFCO:125, 131, 132, 132S, MT3600, MT4000. // **HUSQVARNA:** 335XPT, 338XPT, 343T, 136, 137, 141, 142, 23, 243, 36, 41, E16.
MAKITA: 5012, 5012B, 5014NB. // **MC CULLOCH (US):** 335, 435, 440, 441, 738.// **OLEO-MAC:** 240, OM17E OM19E, OME200. //**PARTNER (SE):** 330, 335, 340, 345, 350, 351, 360, 365, 370, 385, 395, P390, P420. // **TANAKA:** 290, 300, ECS320, ECS330, ECS3301, ECS3351, ECS3500, ECS360. // **SHINDAIWA:** 100, 110, 120, 140, 160, 30S, 340, 345, 346, 350, A103.
ZENOAH: G250TS, G300S, G3100, G310TS, G3200, G320AVS.

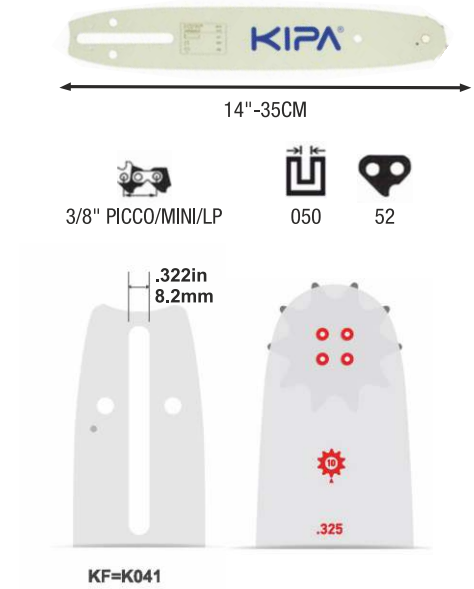

6135
EAN 5604547069367

BARRA MOTOSSERRA 16" 40CM 3/8" 050 PICCO/MINI/LP - 55 ELOS

ALPINA: ELETTRA 160, ELETTRA 170, P360, P361, P370, P390, P391Q.
OLEO MAC: 240, OM17E, OM19E, OME200.
STIHL: 009, 010, 011, 017, 018, 019, 019T, 020, 020T, 021, 021C, 023, 023C, 023L, 025, 025C, E10, E14, E140, E160, E180, E180QCT, HT100, HT101, HT131, HT70, HT75, HTE60, MS140, MS160, MS170, MS171, MS180, MS181, MS190, MS190T, MS191, MS191T, MS192, MS192T, Ms200.

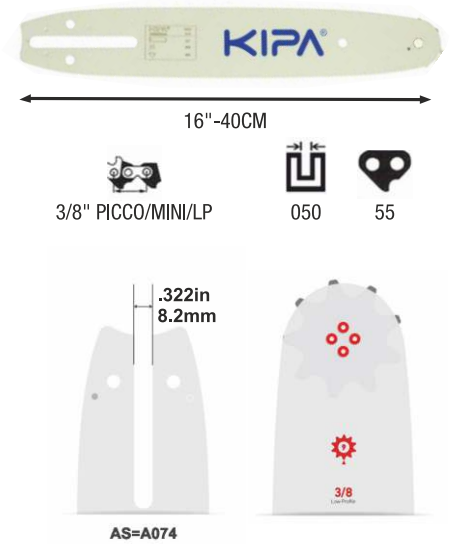

6136 BARRA MOTOSSERRA 16" 40CM 3/8" 050 PICCO/MINI/LP - 57 ELOS

EAN 5604547069374

ALPINA: 352, 382, E150.
DOLMAR: 100, 100S, 101, 102, 103, 104, 105, 106, 108, 275, 285, 295, C2040, ES140, ES151, PS3400TH, PS341, PS3410, PS344, PS35, PS350, PS350C, PS39, PS390, PS400, PS401, PS41, PS45.
ECHO: CS2000, CS2100, CS2600, CS2600ES,CS2700, CS2700ES, CS270WES, CS2800, CS280E, CS302, CS3025, CS3050, Cs315, CS340, CS3400, CS345, CS3450, CS3500.
EFCO:125, 131, 132, 132S, MT3600, MT4000.
HUSQVARNA: 335XPT, 338XPT, 343T, 136, 137, 141, 142, 23, 243, 250PS, 323P4,325P4X, 326P5X, 335XPT, 338XPT, 343T, 36, 41, E16, E316, E317, E321.
MAKITA: 5012, 5012B, 5014NB, 5016NB, DCS300, DCS330S, DCS330TH, DCS34, DCS340, DCS341,
MC CULLOCH (US): 335, 435, 440, 441, 738. // **PARTNER (SE):** 330, 335, 340, 345, 350, 351, 360, 365, 370, 385, 395, P390, P420. // **TANAKA:** 290, 300, ECS320, ECS330, ECS3301, ECS3351, ECS3500, ECS360. // **SHINDAIWA:** 100, 110, 120, 140, 150E, 160, 285S, 300S, 30S
ZENOAH: G300S, GT250TS, G250TS, G300S, G300T, G3100. // **KONTA/TOPSUN** T41, TS4100.

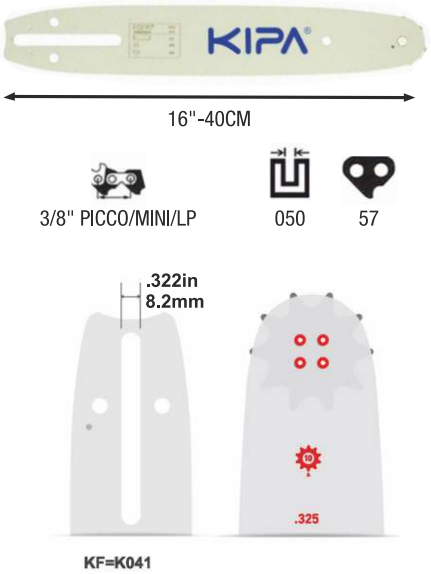

6137 BARRA MOTOSSERRA 16" 40CM .325" 058 - 66 ELOS

EAN 5604547069381

ALPINA// CASTOR // CASTEL GARDEN: S40, S540I, 550, A-40, A-40E, P400, P41, P45, P450, P460, P500, P510, PRO-540, PRO-600, PROF-41, PROF-45B42, B45A, B46, B51, B54A, PROF-45B42,B45A, B46, B51, B54A.**DOLMAR:** 109, 110, 110i, 111, 112, 113, 114, 115i, 116, ES1800, PS460, PS4600, PS500, PS5000, PS510, PS5100S, PS540.
EFCO: 142, 146, 147, 151, 152, 156, 162, 165. // **HOMELITE:** 250, 252, 290, 290C, 300, 340, 340C. // **HUSQVARNA:** 133, 136, 137, 140, 140S, 141, 142, 154, 234, 235, 238, 240, 242, 242XP, 243, 246, 254, 254XP, 254XPG, 257, 261, 262, 262XP, 262XPG, 33, 336, 339XP, 340, 345, 346, 346XP.
JONSERED: 2012, 2012EL, 2014, 2015, 2015EL, 2016, 2016EL, 2036, 2040, 2041, 2045,
MAKITA: DCS430, DCS4300i, DCS431, DCS520, DCS5200i.
PARTNER: 1200EL, 1400EL, 1450EL, 1500EL, 1650EL, 360, 365, 400, 405, 410, 450, 460.
ZENOAH: G410AVS, G415AVS, G455AVS, G46, G500AVS. // **KONTA/TOPSUN** T45, TS4600.

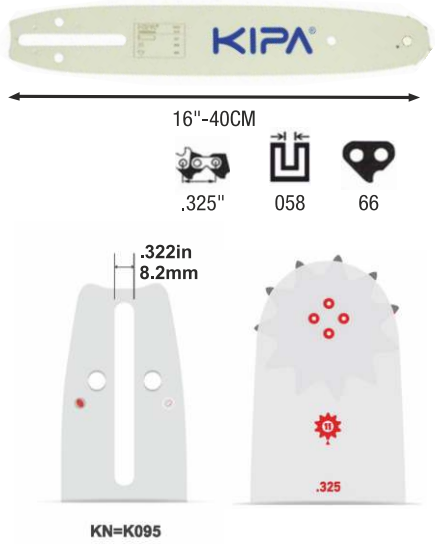

6143 BARRA MOTOSSERRA 18" 45CM .325" 058 - 72 ELOS

EAN 5604547069435

ALPINA // CASTOR / CASTEL GARDEN: S40, S540I, 550, A-40, A-40E, P400, P41, P45, P450, P460, P500, P510, PRO-540, PRO-600, PROF-41, PROF-45B42, B45A, B46, B51, B54A, PROF-45B42,B45A, B46, B51, B54A.
DOLMAR: 109, 110, 110i, 111, 112, 113, 114, 115i, 116, ES1800, PS460, PS4600, PS500, PS5000, PS510, PS5100S, PS540. // **EFCO:** 142, 146, 147, 151, 152, 156, 162, 165.
HOMELITE: 250, 252, 290, 290C, 300, 340, 340C, 3850B, 3850C, 415B, 4550B.
HUSQVARNA: 133, 136, 137, 140, 140S, 141, 142, 154, 234, 235, 238, 240, 242, 242XP, 243, 246, 254, 254XP, 254XPG, 257, 261, 262, 262XP, 262XPG, 33, 336, 339XP, 340, 345, 346, 346XP. // **JONSERED:** 2012, 2012EL, 2014, 2015, 2015EL, 2016, 2016EL, 2036, 2040, 2041, 2045. // **MAKITA:** DCS430, DCS4300i, DCS431, DCS520, DCS5200i.
PARTNER: 365, 400, 405, 410, 450, 460, 465, 495, 500, 510, 540, 545. // **ZENOAH:** G38, G410AVS, G415AVS,G500AVS // **KONTA/TOPSUN** T45,T50, TS4600, TCS5000.

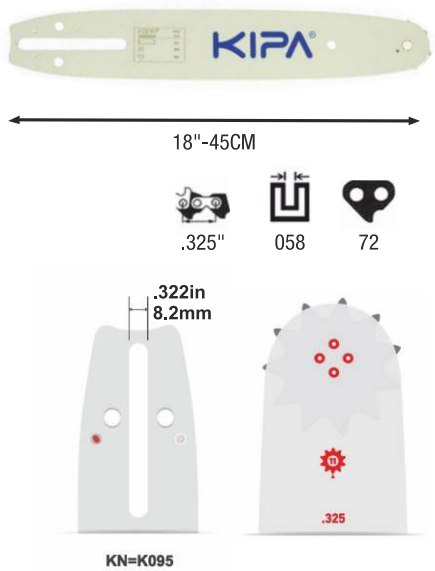

6149 BARRA MOTOSSERRA 16" 40CM .325" 063 - 62 ELOS

EAN 5604547074125

STIHL:019,020,021, 023, 025, 025C, 10, 11, 70, 9, E180, MS230, MS230C, MS230C-BE, MS241C-M, MS250, MS250C, MS250C-BE, MS251, MS251C, MS251C-BE

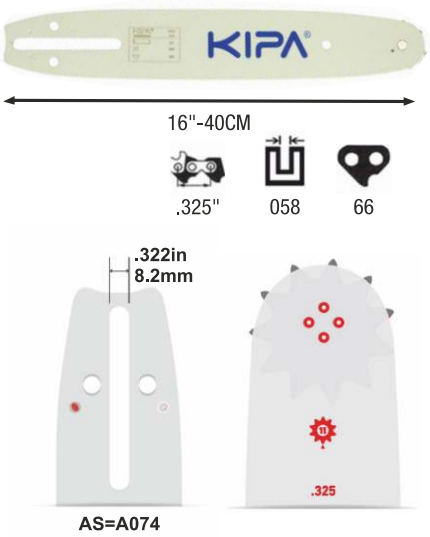

6138 BARRA MOTOSSERRA 16" 40CM .325" 063 - 67 ELOS

EAN 5604547069398

STIHL: 024, 026, 028, 028S, 029, 030, 031, 032, 034, 036, 036PRO, 038, 039, FARM BOSS, 040, 041, 042, 044, 045, 046, 048, 056, 064, 066, MS270, MS270C, MS270CQS, MS271, MS280, MS280C, MS280CQS, MS290, MS291, Ms310, MS311, MS341, MS360, MS360 PRO, MS360QS, MS361, MS361C, MS362, MS381, MS390, Ms391, MS440, MS441, MS460, MS461, MS650, MS660, MS661, FARM BOSS.

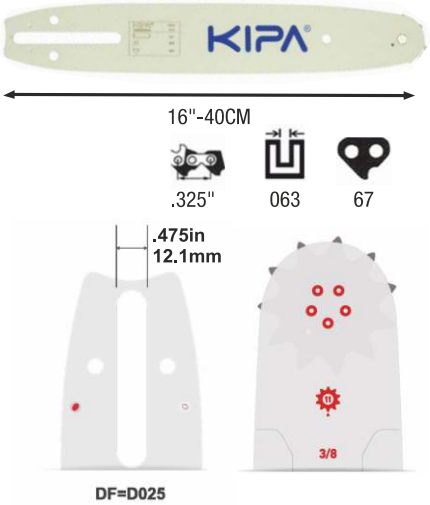

6151 BARRA MOTOSSERRA 18" 45CM .325" 063 - 68 ELOS

EAN 5604547074132

STIHL:019,020,021, 023, 025, 025C, 10, 11, 70, 9, E180, MS230, MS230C, MS230C-BE, MS241C-M, MS250, MS250C, MS250C-BE, MS251, MS251C, MS251C-BE

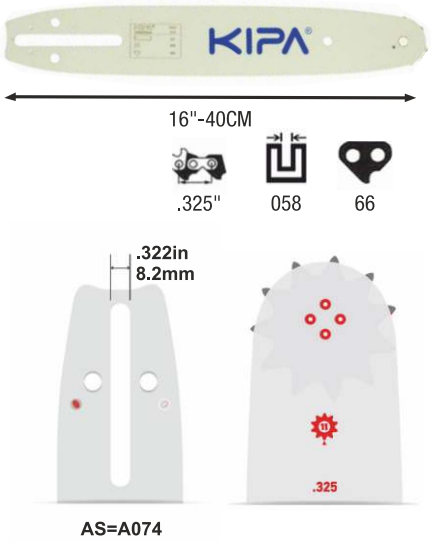

6144 BARRA MOTOSSERRA 18" 45CM .325" 063 - 74 ELOS

EAN 5604547069442

STIHL: 024, 026, 028, 028S, 029, 030, 031, 032, 034, 036, 036PRO, 038, 039, FARM BOSS, 040, 041, 042, 044, 045, 046, 048, 056, 064, 066, MS270, MS270C, MS270CQS, MS271, MS280, MS280C, MS280CQS, MS290, MS291, MS310, MS311, MS341, MS360, MS360 PRO, MS360QS, MS361, MS361C, MS362, MS381, MS390, MS391, MS440, MS441, MS460, MS461, MS650, MS660.

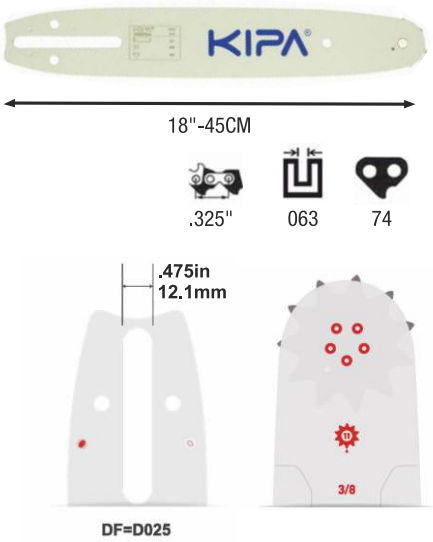

6139 BARRA MOTOSSERRA 16" 40CM 3/8" 058 - 60 ELOS

EAN 5604547069411

ALPINA / CASTOR: 700, 800
HUSQVARNA: L65, 61, 66, 70, 77, 160, 162, 181, 165, 266, 268, 272, 281, 285, 288, 298, 380, 394, 480,1100, 2100, 2101, 3120
JONSERED: C625, 630, 680, 920, 930, 2045, 2077, 2094.
PARTNER: 660, 7700.
POULAN: 415, 475.
SHINDAIWA / SDK: 550, 575, 580, 680, 685, 757.
SOLO: 603, 662, 667, 670, 680, 690.

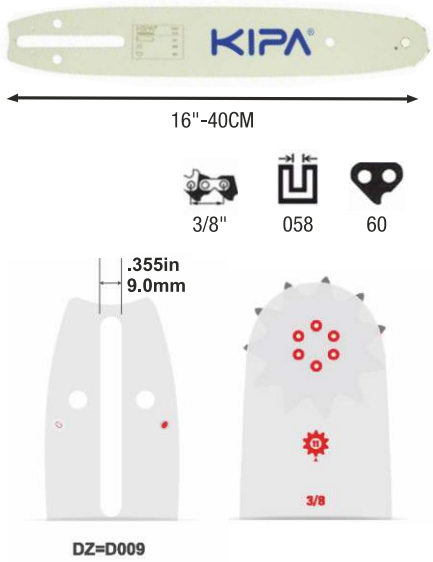

6141 BARRA MOTOSSERRA 16" 40CM 3/8" 063 - 60 ELOS

EAN 5604547069404

STIHL: 029, 029 SUPER, 031, 032, 034, 036, 036PRO, 036QS, 038, 039, 041, 042, 044, 044C, 045, 046, 046C, 048, 056, 064, 066, E15, E20, E220, E220C, E220Q, MS200, MS220, MS290, MS310, MS311, MS340, MS341, MS360, MS360PRO, MS360QS, MS361, MS361C, MS390, MS391, MS440, MS441, MS460, MS640, MS650, MS660, MS880, MSA200, MSE220, MSE220Q.

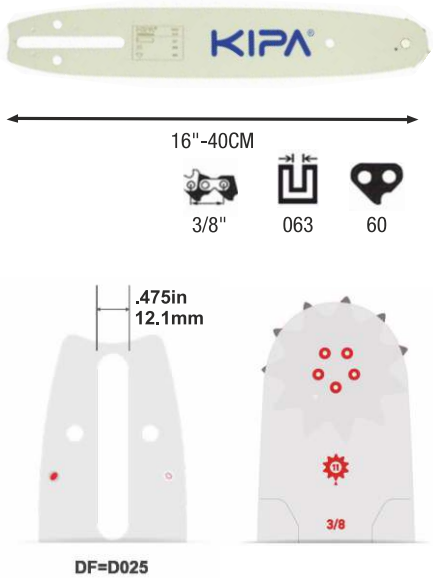

6146 BARRA MOTOSSERRA 18" 45CM 3/8" 058 - 68 ELOS

EAN 5604547069459

ALPINA // CASTOR: P660, P680, P700, P750, P800, PROF-700, PROF-800
DOLMAR: PS6400, PS6400H, PS7300, PS7300H, PS7900, PS7900H, PS9000, PS9010
HUSQVARNA: 1100, 160, 162, 181, 185, 2100, 2100XP, 2101, 2101XP, 260, 266, 266XP, 268, 268XP, 272, 272XP, 272XPG, 281, 281XP, 285, 288, 288XP, 298, 298X, 298XG, 3120, 3120XP, 365, 371, 371XP, 371XPG, 372, 372XP, 372XPG, 380, 385, 385XP, 390, 394, 394XP, 394XPG, 395, 395XP, 395XPG, 480, 570, 575, 575XP, 576XP, 576XP AUTO TUNE, 576XPG, 576XPG AUTO TUNE, 61, 64, 65, 66, 70, 77, L MODELLE.
JONSERED: 2065, 2071, 2077, 2083, 2094, 2095, 2165, 2171, 2186, 625, 630, 630 SUPER, 670, 670670 CHAMP, 820 (MIT 9MM BOLZEN), 830 (MIT 9MM BOLZEN), 920 (MIT 9MM BOLZEN), 930 (MIT 9MM BOLZEN)
MAKITA: DCS6400, DCS6401, DCS7300, DCS7301, DCS7900, DCS7901, DCS9000, DC9010
PARTNER (SE): 660, 710, P7700
SHINDAIWA: 550, 575, 577, 680, 695, 757, 757C, YB1091, YB801, YB901
SOLO: 603, 662, 665, 667, 670, 675, 680, 681, 690, 694

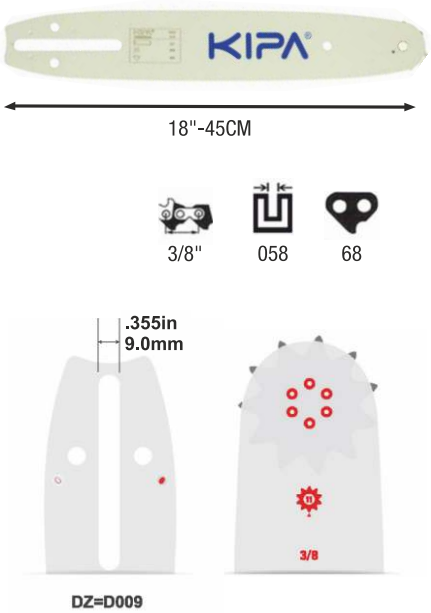

6147 BARRA MOTOSSERRA 18" 45CM 3/8" 063 - 66 ELOS

EAN 5604547069466

STIHL: 029, 029 SUPER, 031, 032, 034, 036, 036PRO, 036QS, 038, 039, 041, 042, 044, 044C, 045, 046, 046C, 048, 056, 064, 066, E15, E20, E220, E220C, E220Q, MS200, MS220, MS290, MS310, MS311, MS340, MS341, MS360, MS360PRO, MS360QS, MS361, MS361C, MS390, MS391, MS440, MS441, MS460, MS640, MS650, MS660, MS880, MSA200, MSE220, MSE220Q.

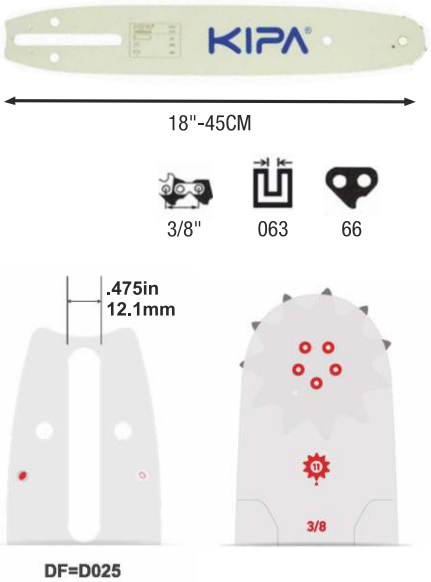

7586 PORCA DE APERTO DA BARRA M8 x 1,25 SEXTAVADO 13mm VULGAR **PACK 10**

EAN 5604547063860

7587 PORCA DE APERTO DA BARRA M8 x 1,25 SEXTAVADO 19mm ADAPTÁVEL STIHL **PACK 10**

EAN 5604547063877

CÓDIGO	DENTE	PASSO	CANAL	N.º ELOS	EAN
5029	Semi-Chisel Redondo	1/4” ETP	0,43” - 1,1mm	28	5604547071537
5181	Semi-Chisel Redondo	1/4” ETP	0,43” - 1,1mm	29	5604547071544
5049	Semi-Chisel Redondo	1/4” ETP	0,43” - 1,1mm	32	5604547067653
5013	Semi-Chisel Redondo	1/4” ETP	0,43” - 1,1mm	36	5604547068650
5782	Semi-Chisel Redondo	1/4” ETP	0,43” - 1,1mm	37	5604547070264
5182	Semi-Chisel Redondo	1/4” ETP	0,43” - 1,1mm	38	5604547071551
8956	Semi-Chisel Redondo	3/8” PICCO/MINI/LP	0,43” - 1,1mm	44	5604547025844
7362	Semi-Chisel Redondo	3/8” PICCO/MINI/LP	0,43” - 1,1mm	50	5604547052857
9865	Semi-Chisel Redondo	3/8” PICCO/MINI/LP	0,43” - 1,1mm	53	5604547071957
8953	Semi-Chisel Redondo	3/8” PICCO/MINI/LP	0,50” - 1,3mm	40	5604547025820
9835	Semi-Chisel Redondo	3/8” PICCO/MINI/LP	0,50” - 1,3mm	42	5604547066922
9836	Semi-Chisel Redondo	3/8” PICCO/MINI/LP	0,50” - 1,3mm	44	5604547066939
8961	Semi-Chisel Redondo	3/8” PICCO/MINI/LP	0,50” - 1,3mm	45	5604547025899
8964	Semi-Chisel Redondo	3/8” PICCO/MINI/LP	0,50” - 1,3mm	50	5604547025929
8965	Semi-Chisel Redondo	3/8” PICCO/MINI/LP	0,50” - 1,3mm	52	5604547025936
9838	Semi-Chisel Redondo	3/8” PICCO/MINI/LP	0,50” - 1,3mm	53	5604547066953
8970	Semi-Chisel Redondo	3/8” PICCO/MINI/LP	0,50” - 1,3mm	55	5604547025981
8967	Semi-Chisel Redondo	3/8” PICCO/MINI/LP	0,50” - 1,3mm	56	5604547025950
9839	Semi-Chisel Redondo	3/8” PICCO/MINI/LP	0,50” - 1,3mm	57	5604547066960
8771	Semi-Chisel Redondo	.325”	0,50” - 1,3mm	62	5604547071568
8924	Semi-Chisel Redondo	.325”	0,50” - 1,3mm	66	5604547025622
8251	Semi-Chisel Redondo	.325”	0,50” - 1,3mm	72	5604547035423
8992	Semi-Chisel Redondo	.325”	0,58” - 1,3mm	64	5604547026162
9967	Semi-Chisel Redondo	.325”	0,58” - 1,3mm	66	5604547074590
8932	Semi-Chisel Redondo	.325”	0,58” - 1,5mm	68	5604547034761
9837	Semi-Chisel Redondo	.325”	0,58” - 1,5mm	72	5604547066946
8814	Semi-Chisel Redondo	.325”	0,58” - 1,5mm	78	5604547037939
8773	Semi-Chisel Redondo	.325”	0,63” - 1,6mm	62	5604547071582
8901	Semi-Chisel Redondo	.325”	0,63” - 1,6mm	67	5604547025424
8774	Semi-Chisel Redondo	.325”	0,63” - 1,6mm	74	5604547071599
8990	Semi-Chisel Redondo	3/8”	0,58” - 1,5mm	68	5604547026148

ETP = Corrente para serras a bateria.

1/4 ROLO CORRENTE - 7,5 METROS

CÓDIGO	DENTE	PASSO	CANAL	N.º ELOS	EQUIVALÊNCIA SARP // OREGON		EAN
3325	Semi-Chisel Redondo	1/4" ETP	0,43" - 1,1mm	598	--	--	5604547069473
3324	Semi-Chisel Redondo	1/4"	0,43" - 1,1mm	598	S2325	--	5604547066762
3323	Semi-Chisel Redondo	1/4"	0,50" - 1,3mm	598	S2525	25AP	5604547066755
3315	Semi-Chisel Redondo	3/8" PICCO/MINI/LP	0,43" - 1,1mm	410	SE1S25	90SG	5604547065130
3316	Semi-Chisel Redondo	3/8" PICCO/MINI/LP	0,50" - 1,3mm	410	SE3L25	90VX	5604547065147
3317	Semi-Chisel Redondo	.325"	0,50" - 1,3mm	460	SG325	20BP	5604547065154
3318	Semi-Chisel Redondo	.325"	0,58" - 1,5mm	460	SG525	21BP	5604547065161
3319	Semi-Chisel Redondo	.325"	0,63" - 1,6mm	460	SG625	22BP	5604547065178
3320	Semi-Chisel Redondo	3/8"	0,50" - 1,3mm	410	SD325	72D	5604547065185
3321	Semi-Chisel Redondo	3/8"	0,58" - 1,5mm	410	SD525	73D	5604547065192
3322	Semi-Chisel Redondo	3/8"	0,63" - 1,6mm	410	SD625	75D	5604547065208

ETP = Corrente para serras a bateria.

ROLO CORRENTE - 30,5 METROS

CÓDIGO	DENTE	PASSO	CANAL	N.º ELOS	EQUIVALÊNCIA SARP // OREGON		EAN
3301	Semi-Chisel Redondo	3/8" PICCO/MINI/LP	0,43" - 1,1mm	1640	SE1S100	90SG	5604547064997
3302	Semi-Chisel Redondo	3/8" PICCO/MINI/LP	0,50" - 1,3mm	1640	SE3L100	90VX	5604547065000
3304	Semi-Chisel Redondo	.325"	0,50" - 1,3mm	1840	SG3100	20BP	5604547065024
3303	Chisel Quinado	.325"	0,50" - 1,3mm	1840	SG3C100	20LP	5604547065017
3305	Semi-Chisel Redondo	.325"	0,58" - 1,5mm	1840	SG5100	21BP	5604547065031
3306	Chisel Quinado	.325"	0,58" - 1,5mm	1840	SG5C100	21LP	5604547065048
3307	Semi-Chisel Redondo	.325"	0,63" - 1,6mm	1840	SG6100	22BP	5604547065055
3308	Chisel Quinado	.325"	0,63" - 1,6mm	1840	SG6C100	22LP	5604547065062
3309	Semi-Chisel Redondo	3/8"	0,50" - 1,3mm	1640	SD3100	72D	5604547065079
3310	Chisel Quinado	3/8"	0,50" - 1,3mm	1640	SD3C100	72LP	5604547065086
3311	Semi-Chisel Redondo	3/8"	0,58" - 1,5mm	1640	SD5100	73D	5604547065093
3312	Chisel Quinado	3/8"	0,58" - 1,5mm	1640	SD5C100	73LP	5604547065109
3314	Semi-Chisel Redondo	3/8"	0,63" - 1,6mm	1640	SD6100	75D	5604547065123
3313	Chisel Quinado	3/8"	0,63" - 1,6mm	1640	SD6C100	75LP	5604547065116

- ELO LIGAÇÃO KIPA / OREGON / CARLTON

9451	ELO DE LIGAÇÃO 1/4” ETP MACHO + FÊMEA **PACK 25**	EAN 5604547047761
9452	ELO DE LIGAÇÃO 1/4” MACHO + FÊMEA **PACK 25**	EAN 5604547047778
9329	ELO DE LIGAÇÃO 3/8” PICCO/MINI/LP MACHO + FÊMEA **PACK 25**	EAN 5604547043862
9331	ELO DE LIGAÇÃO .325” MACHO + FÊMEA **PACK 25**	EAN 5604547043886
9333	ELO DE LIGAÇÃO 3/8” MACHO + FÊMEA **PACK 25**	EAN 5604547043909

tecomec

01005006	PEDRA DE AFIAR TECOMEC 105 x 22,2 x 3,2mm	EAN 8032706102193	4
01005007	PEDRA DE AFIAR TECOMEC 105 x 22,2 x 4,7mm	EAN 8032706102209	4

K00204005	PEDRA DE AFIAR TECOMEC 145 x 22,2 x 3,2mm	EAN 8032706107594	5
01005004	PEDRA DE AFIAR TECOMEC 145 x 22,2 x 4,7mm	EAN 8032706102179	4

K00204026	PEDRA DE AFIAR TECOMEC 145 x 22,2 x 3,2mm Grão fino	EAN 8032706105583	5
K00204009	PEDRA DE AFIAR TECOMEC 145 x 22,2 x 4,7mm Grão fino	EAN 8032706103503	4

ESPESSURA	TIPO DE CORRENTE
3,2mm	1/4” - .325” - 3/8”MINI
4,7mm	.325” - 3/8” - .404”

7776	BOMBA MASSA p/ Barra Motoserra (c/ massa)	EAN 5604547039131

5111	ENROLADOR MOLAS DE ARRANQUE KIPA	EAN 5604547050921

MADE IN UE

2009	EAN 5604547074149	LIMA 9/64” - 3,6mm (dúzia) I Recomendado p/ Corrente 1/4”
2010	EAN 5604547074156	LIMA 5/32” - 4mm (dúzia) I Recomendado p/ Corrente 3/8” MINI LP / 1/4”
2011	EAN 5604547074163	LIMA 11/64” - 4,5mm (dúzia) I Recomendado p/ Corrente 3/8” MINI LP
2012	EAN 5604547074170	LIMA 3/16” - 4,8mm (dúzia) I Recomendado p/ Corrente .325”
2013	EAN 5604547074187	LIMA 13/64” - 5,2mm (dúzia) I Recomendado p/ Corrente 3/8”
2014	EAN 5604547074194	LIMA 7/32” - 5,6mm (dúzia) I Recomendado p/ Corrente 3/8”
2015	EAN 5604547076846	LIMA Plana (dúzia)

Made in Switzerland

5551	EAN 5604547076761	LIMA 1/8” - 3,2mm (dúzia) I Recomendado p/ Corrente 1/4” Suiça
5552	EAN 5604547076778	LIMA 5/32” - 4mm (dúzia) I Recomendado p/ Corrente 3/8” MINI LP / 1/4” Suiça
5553	EAN 5604547076785	LIMA 11/64” - 4,5mm (dúzia) I Recomendado p/ Corrente 3/8” MINI LP Suiça
5554	EAN 5604547076792	LIMA 3/16” - 4,8mm (dúzia) I Recomendado p/ Corrente .325” Suiça
5555	EAN 5604547076808	LIMA 13/64” - 5,2mm (dúzia) I Recomendado p/ Corrente 3/8” Suiça
5556	EAN 5604547076815	LIMA 7/32” - 5,5mm (dúzia) I Recomendado p/ Corrente 3/8” Suiça
5557	EAN 5604547076822	LIMA 1/4” - 6,3mm (dúzia) I Recomendado p/ Corrente 3/8” Suiça
5558	EAN 5604547076839	LIMA Plana (dúzia) I Recomendado p/ Corrente 3/8” Suiça

9555	EAN 5604547051102	CABO DE LIMA CONFORT

10

7534 CHAVE DE AFINAR carburador 7 estrias
EAN 5604547061866

7535 CHAVE DE AFINAR carburador 21 estrias
EAN 5604547061873

7536 CHAVE DE AFINAR carburador PAC MAN pequeno
EAN 5604547061880

9310 CHAVE DE AFINAR carburador PAC MAN grande
EAN 5604547042667

7537 CHAVE DE AFINAR carburador D pequeno
EAN 5604547061897

7532 CHAVE DE AFINAR carburador D grande
EAN 5604547061842

7533 CHAVE DE AFINAR carburador Duplo D
EAN 5604547061859

9231 BIDÃO COMBUSTÍVEL - 5 litros
EAN 5604547040441

10

9232 BIDÃO COMBUSTÍVEL - 10 litros
EAN 5604547040458

9233 BIDÃO COMBUSTÍVEL - 20 litros
EAN 5604547040465

6

5170901 BIDÃO DUPLO - 5 / 2,5 litros
EAN 5604547000803

4

51709017 BIDÃO DUPLO - 6 / 3 litros
EAN 8032706106221

4
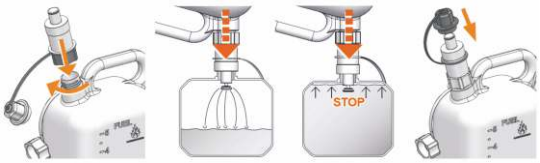
51709005 VÁLVULA DE GASOLINA para bidão duplo TECOMEC
EAN 8032706103558